

Electric control device with UP, LOCK and DOWN buttons.



Oil-water separator and solenoid air valve are installed on the power side column.

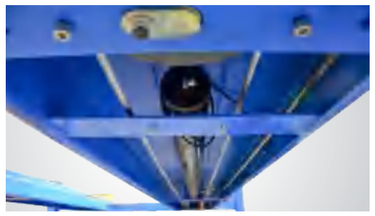

High quality hydraulic cylinder utilizes imported oil seals.

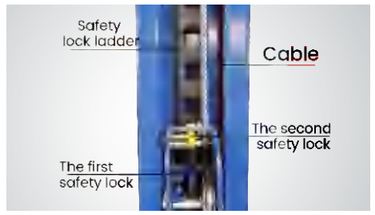

Double safety locks provide additional safety.



Extremely wide of 2946mm between 2 columns to accomodate wide vehicles.



Stepless adjustable width between platforms.

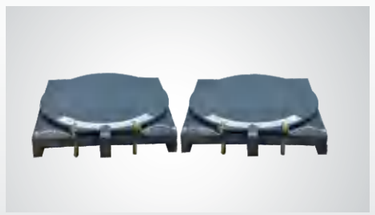

Optional Turnplate. Each alignment lift need two units. Kits No.40101
Only available on 412ASX



Optional Rolling Jacks
RJ-6H: manual hydraulic type 2,800KG.
RJ-6A: pneumatic hydraulic type 2,800KG.

PEAK CORPORATION
http://www.peaklift.cn

No.3 Luomu Road, Muyuan, Shishan Town, Nanhai District, Foshan (528225) , China
Tel:86-757-81102815 Fax:86-757-81102809

ELECTRIC CONTROL FOUR POST LIFT

MODEL 412SX 412ASX

PEAK®
World-class lifts

More comfort by more width, the 412 Series boasts an impressive 5,500 kg lifting capacity, designed to handle virtually all daily requirements for general service and precision alignment work. Featuring an exceptional 2,946 mm column spacing, this series provides effortless vehicle access and ample working space for a wide range of vehicles. The stepless adjustment system ensures precise fit for varying wheelbases, delivering unmatched versatility in your service bay.





GENERAL SERVICE FOUR POST LIFT

MODEL 412SX

FEATURES

- 24V electrical control operation system;
- 2946mm oversized width between columns, accommodates more vehicles;
- High quality hydraulic cylinder design and manufactured at high standard;
- Mechanical self-locking and air-release safety lock system;
- Dual safety devices mechanism: both primary safety locks and cable-slack protection system;
- Non-skid diamond platforms;
- Stepless adjustable width between platforms.

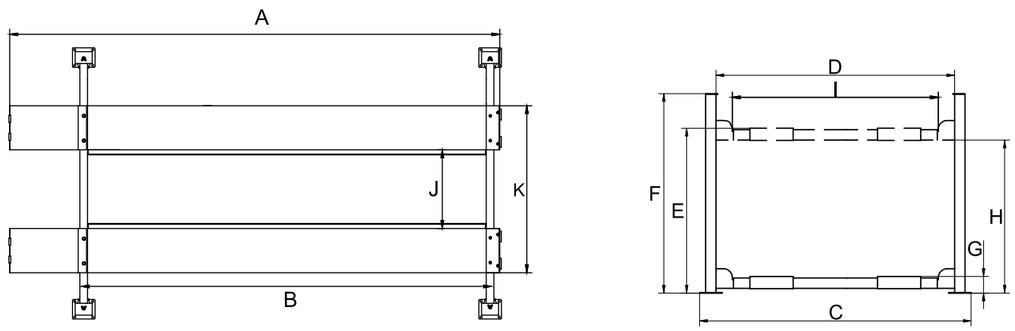

412SX



ALIGNMENT FOUR POST LIFT

MODEL 412ASX

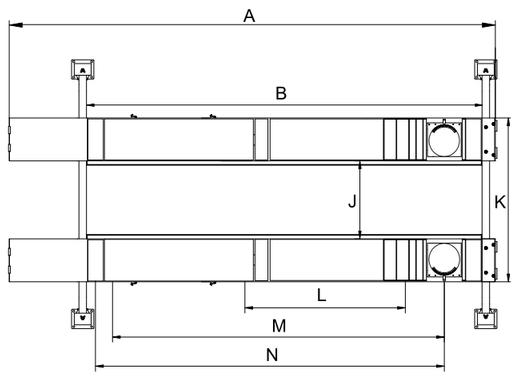

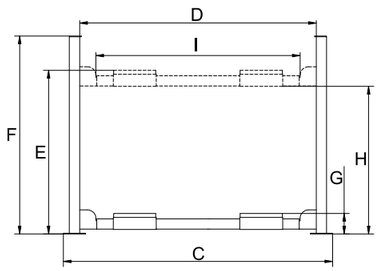

412ASX

SPECIFICATIONS

Model	Lifting Capacity	Lifting Time	A	B	C	D	E		F	G	H		I	J	K	L	M	N	Gross Weight	Motor Power
			Overall Length (Inc Ramps)	Runway Length	Overall Width	Width Between Posts	Max. Lifting Height	Max. Lock Height to top of runway	Overall Height	Minmum Height	Max. Underneath Height	Max. Lock Underneath runway	Drive-Thru Clearance	Width Between Runways	Outside Edge of Runways	Min. Four Wheel Align	Max. Four Wheel Align	Max. Two Wheel Align		
412SX	5.5 T (12,000lbs)	45S	5910mm (232 5/8")	4840mm (190 9/16")	3302mm (130")	2946mm (116")	1890mm (74 7/16")	1810mm (71 1/4")	2185mm (86")	170mm (6 11/16")	1750mm (68 7/8")	1670mm (65 3/4")	2592mm (102 1/16")	1100mm(43 5/16") Min.965mm(38")~ Max.1339mm(52 3/4")	2116mm (83 5/16") Min.1981mm(78")~ Max.2355mm (92 3/4")	/	/	/	1016KG (2,240lbs)	3.0HP
412ASX	5.5 T (12,000lbs)	45S	5910mm (232 5/8")	4640mm (182 11/16")	3302mm (130")	2946mm (116")	1940mm (76 3/8")	1860mm (73 1/4")	2185mm (86")	220mm (8 11/16")	1750mm (68 7/8")	1670mm (65 3/4")	2592mm (102 1/16")	1100mm(43 5/16") Min.965mm(35 7/16")~ Max.1339mm(52 3/4")	2116mm (83 5/16") Min.1981mm(78")~ Max.2355mm (92 3/4")	2076mm (81 3/4")	4049mm (159 7/16")	4083mm (160 3/4")	1267KG (2,793lbs)	3.0HP

The images, technical specifications, and descriptions shown here are subject to change without prior notice. Please contact us for the latest information if necessary.